USB-TYPE-C 3.0

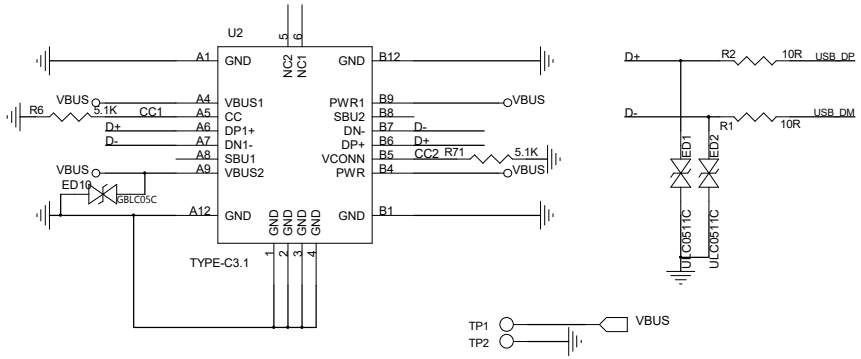

USB输入

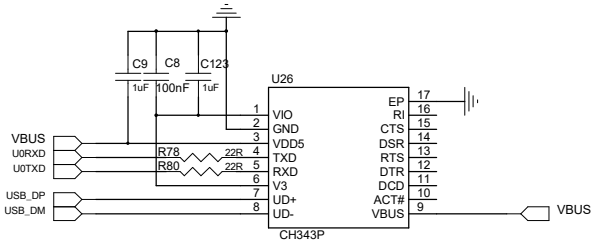

USB TO UART

USB OTG 输出

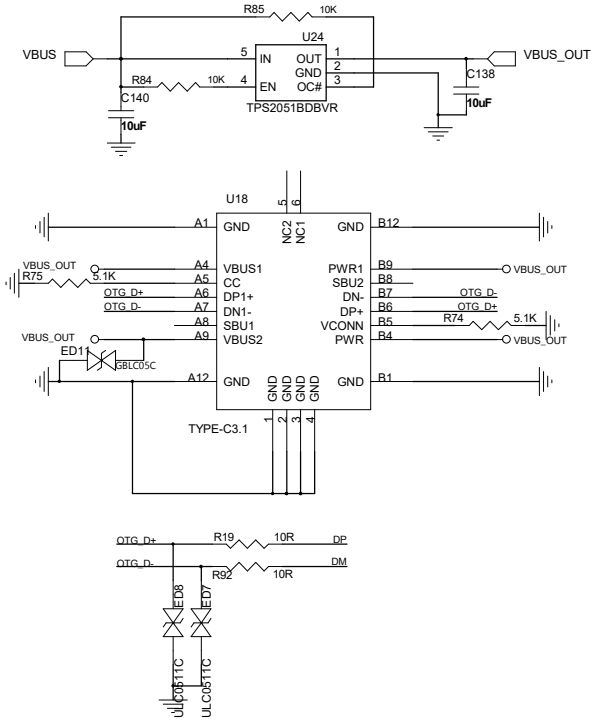

REVISION RECORD			
LTR	ECO NO:	APPROVED:	DATE:

DRAWN:	DATED:	COMPANY:	
CHECKED:	DATED:	TITLE:	
QUALITY CONTROL:	DATED:	CODE: / SIZE: B / DRAWING NO:	REV:
RELEASED:	DATED:	SCALE:	SHEET: 1 OF 8

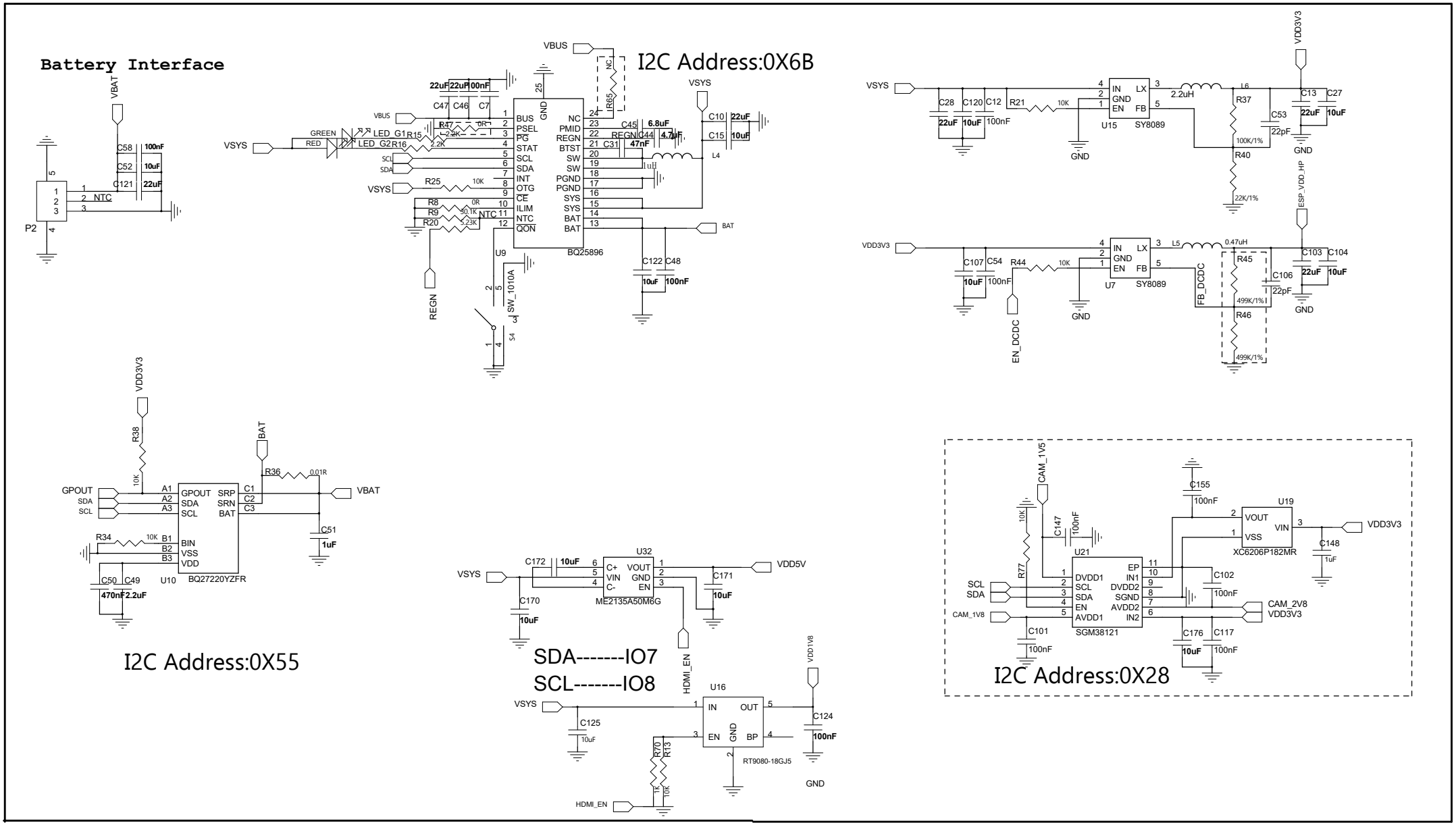

Title		
Size B	Document Number POWER-INPUT	Rev V1.6
Date: Thursday, September 17, 2020	Sheet 2 of 8	

Core

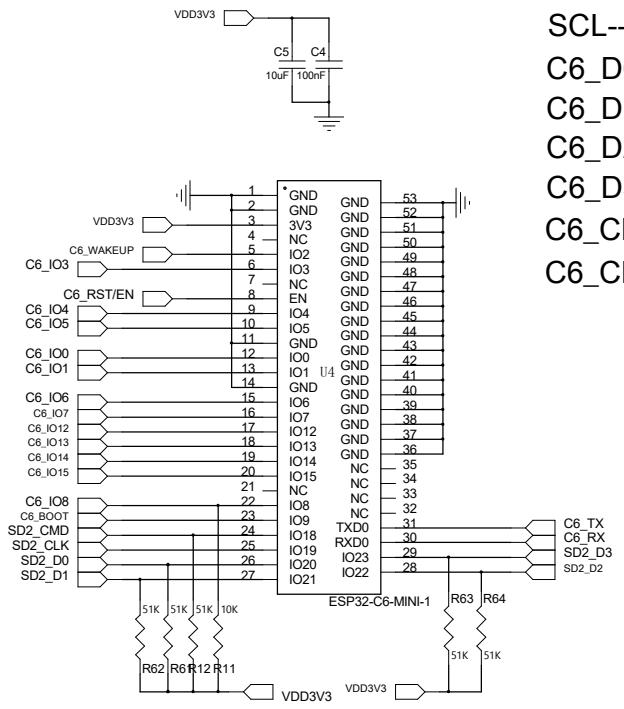

SDA-------IO7
SCL-------IO8
C6_D0-------IO14
C6_D1-------IO15
C6_D2-------IO16
C6_D3-------IO17
C6_CLK-------IO18
C6_CMD-------IO19

Connector

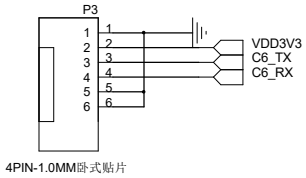

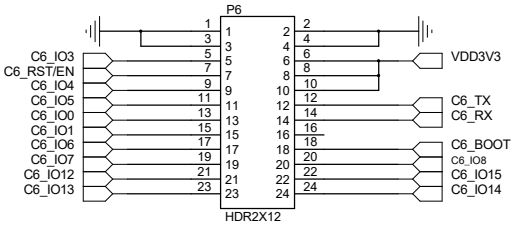

RST-KEY

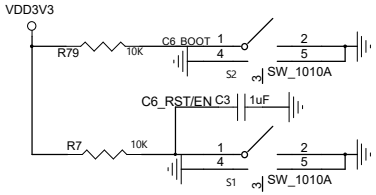

Title		
Size B	Document Number ESP32	Rev V1.6
Date: Wednesday, December 16, 2020	Sheet 3 of 8	

I2C Address:0X68

SDA-------IO7
SCL-------IO8
LED1_PWM-------IO53
LED2_PWM-------IO54

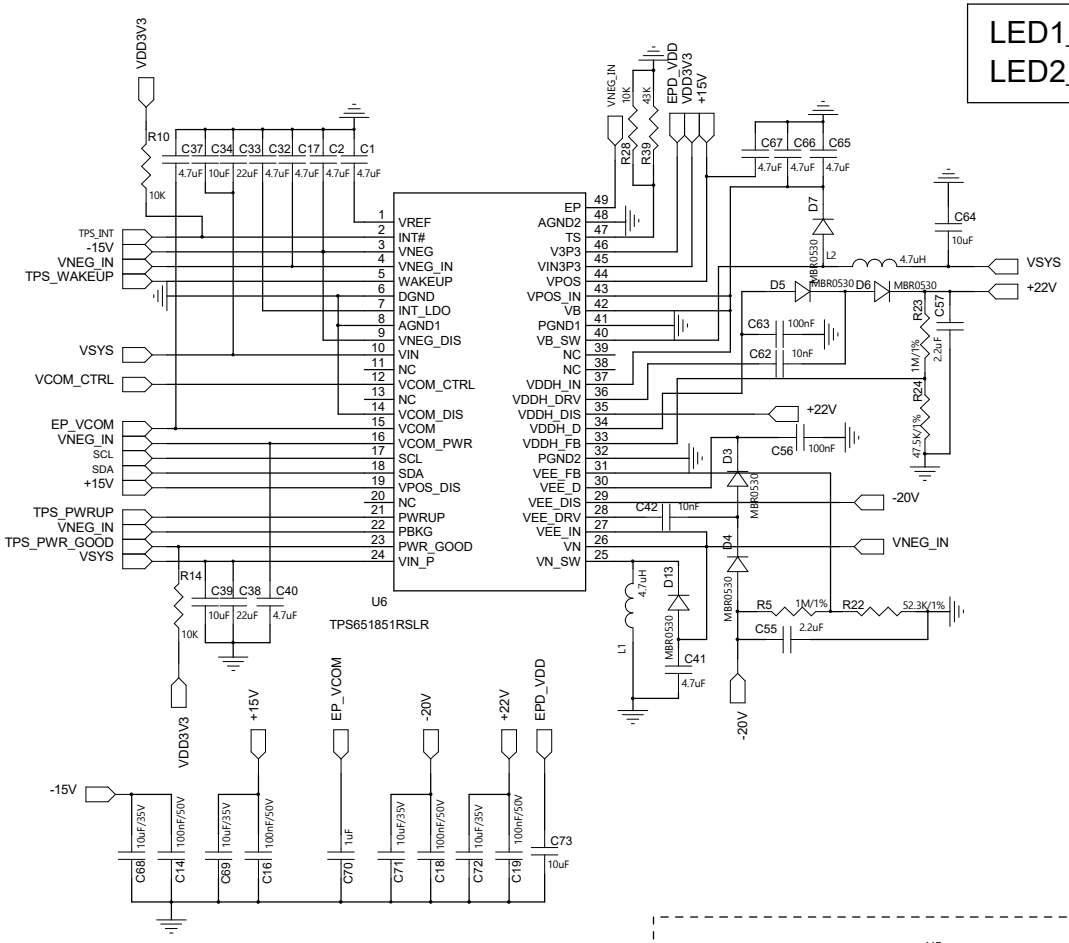

E-paper POWER

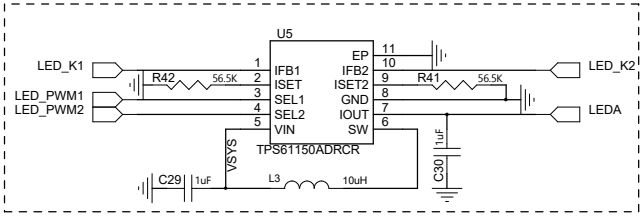

背光驱动

SDA-------IO7
SCL-------IO8
PCA_INT-------IO5

I2C Address:0X20

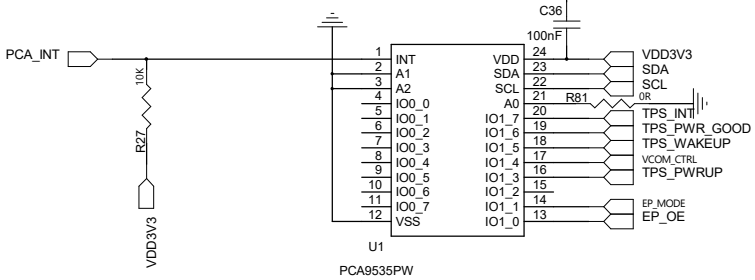

IO扩展

CKH-------IO24
STH-------IO25
LE-------IO26
D0-------IO27
D1-------IO28
D2-------IO29
D3-------IO30
D4-------IO31
D5-------IO32
D6-------IO33
D7-------IO34
STV-------IO48
CKV-------IO13
T_INT-------IO3
SDA-------IO7
SCL-------IO8

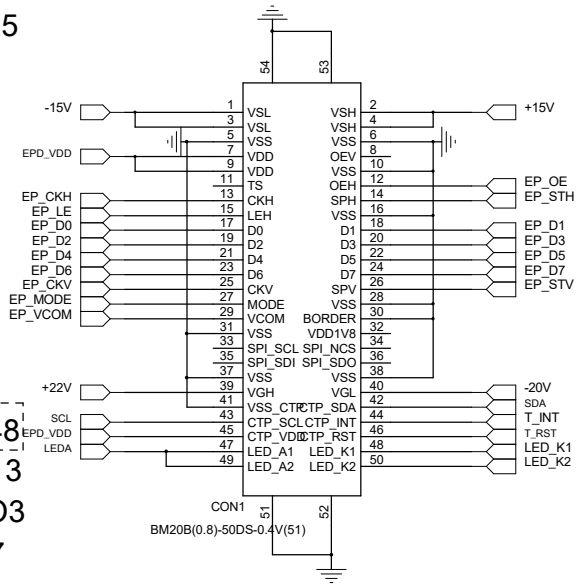

5.8寸 E-paper

Title		
Size B	Document Number SIM7000X	Rev V1.6
Date: Monday, May 4, 2020	Sheet 4 of 8	

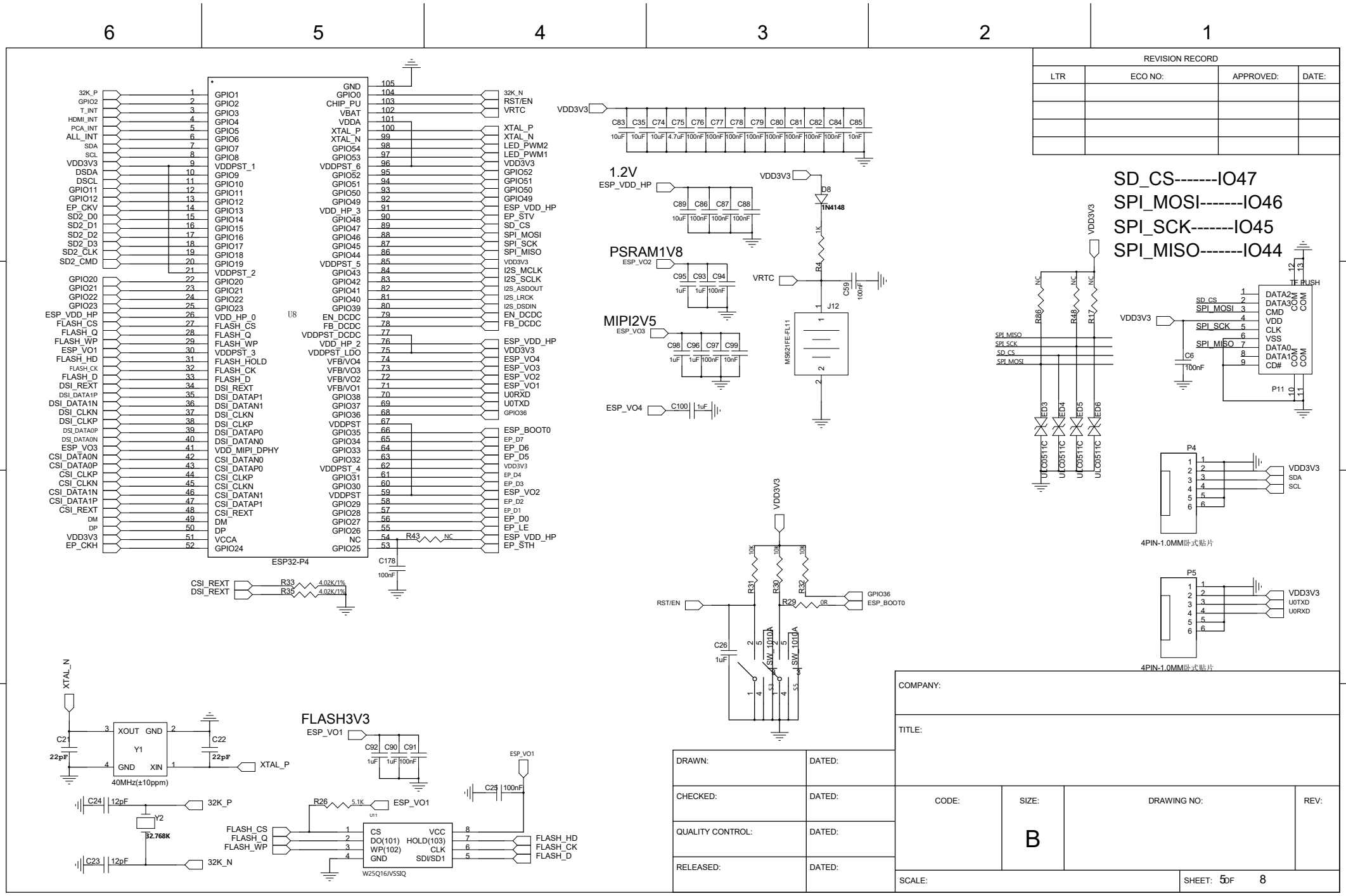
REVISION RECORD
LTR
ECO NO:
APPROVED:
DATE:
U8
ESP32-P4
VDD3V3
1.2V
ESP_VDD_HP
PSRAM1V8
ESP_VO2
MIPI2V5
ESP_VO3
ESP_VO4
VRTC
J12
M9021FE-FL11
D8
1N4148
SD_CS-------IO47
SPI_MOSI-------IO46
SPI_SCK-------IO45
SPI_MISO-------IO44
TF PUSH
P11
P4
4PIN-1.0MM卧式贴片
P5
4PIN-1.0MM卧式贴片
RST/EN
GPIO36
ESP_BOOT0
SW_1010A
XTAL_N
XTAL_P
Y1
40MHz(±10ppm)
Y2
32.768K
32K_P
32K_N
FLASH3V3
ESP_VO1
W25Q16JVSSIQ
FLASH_CS
FLASH_Q
FLASH_WP
FLASH_HD
FLASH_CK
FLASH_D
CSI_REXT
DSI_REXT
COMPANY:
TITLE:
DRAWN:
DATED:
CHECKED:
QUALITY CONTROL:
RELEASED:
CODE:
SIZE:
B
DRAWING NO:
REV:
SCALE:
SHEET: 5 OF 8

REVISION RECORD			
LTR	ECO NO:	APPROVED:	DATE:

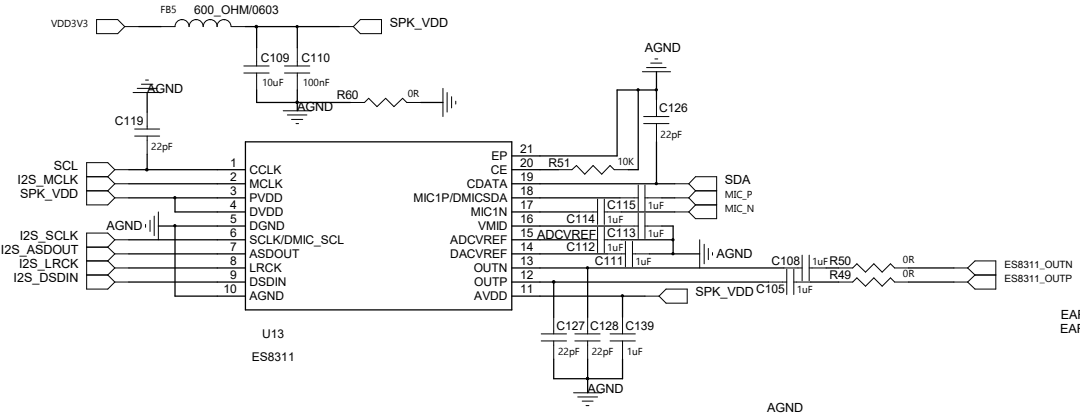

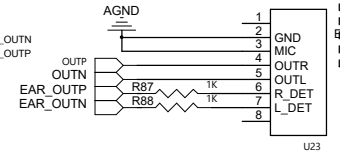

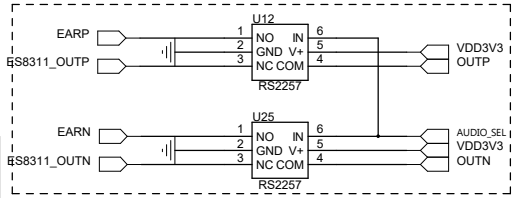

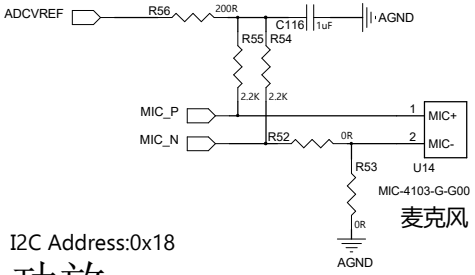

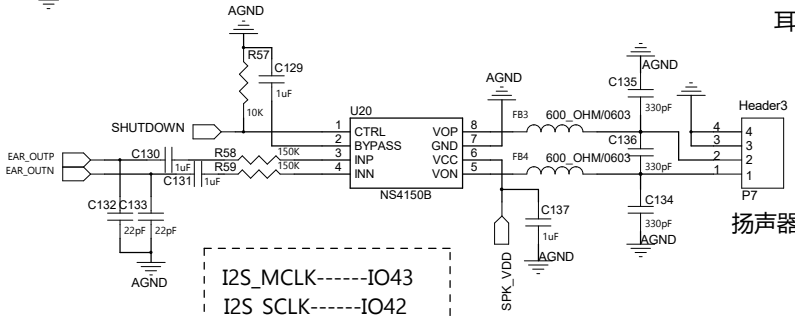

I2C Address:0x18

功放

I2S_MCLK------IO43
I2S_SCLK------IO42
I2S_ASDOUT------IO41
I2S_LRCK------IO40
I2S_DSDIN------IO39

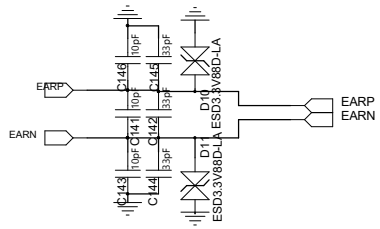

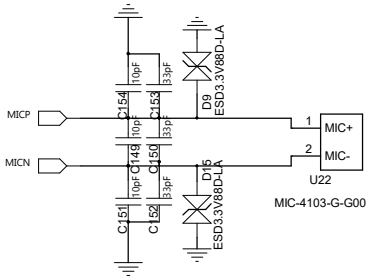

COMPANY:			
TITLE:			
CODE:	SIZE: B	DRAWING NO:	REV:
SCALE:		SHEET: 6 OF 8	

DRAWN:	DATED:
CHECKED:	DATED:
QUALITY CONTROL:	DATED:
RELEASED:	DATED:

HDMI-A

REVISION RECORD			
LTR	ECO NO:	APPROVED:	DATE:

I2C Address:0x48

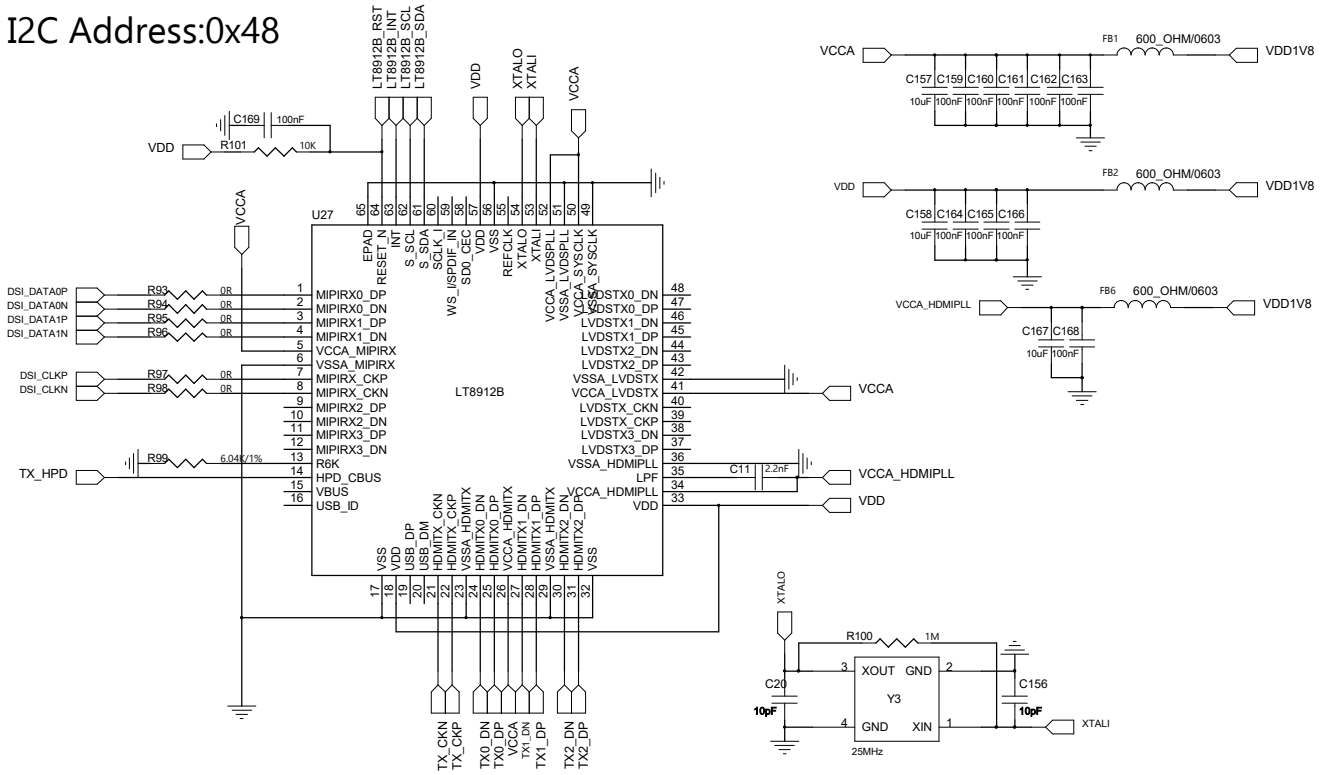

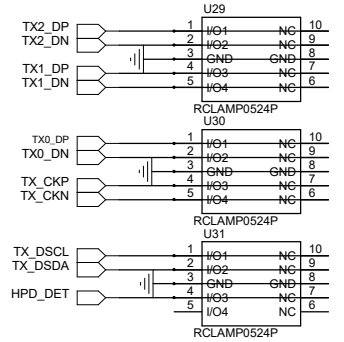

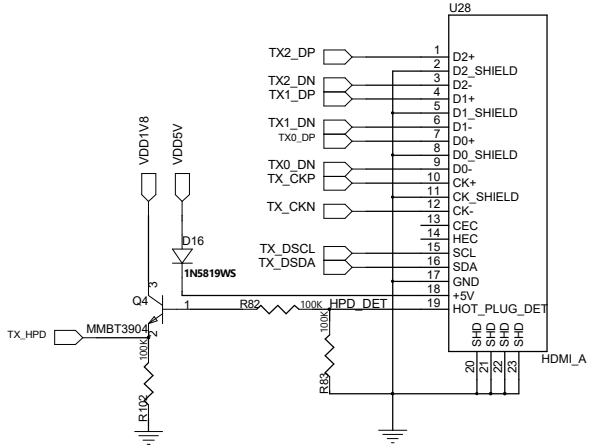

电平转换

DSDA-------IO9
DSCL-------IO10

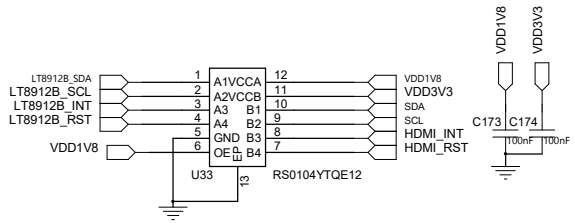

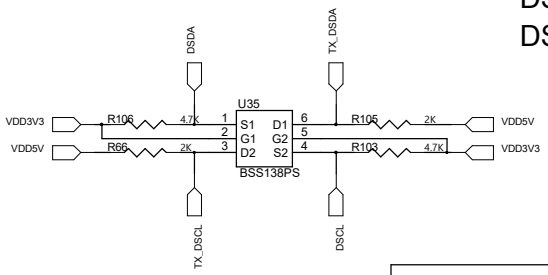

HDMI_INT-------IO4
SDA-------IO7
SCL-------IO8

DRAWN:	DATED:
CHECKED:	DATED:
QUALITY CONTROL:	DATED:
RELEASED:	DATED:

COMPANY:

TITLE:

CODE:	SIZE:	DRAWING NO:	REV:
	B		

SCALE:

SHEET: 7 OF 8

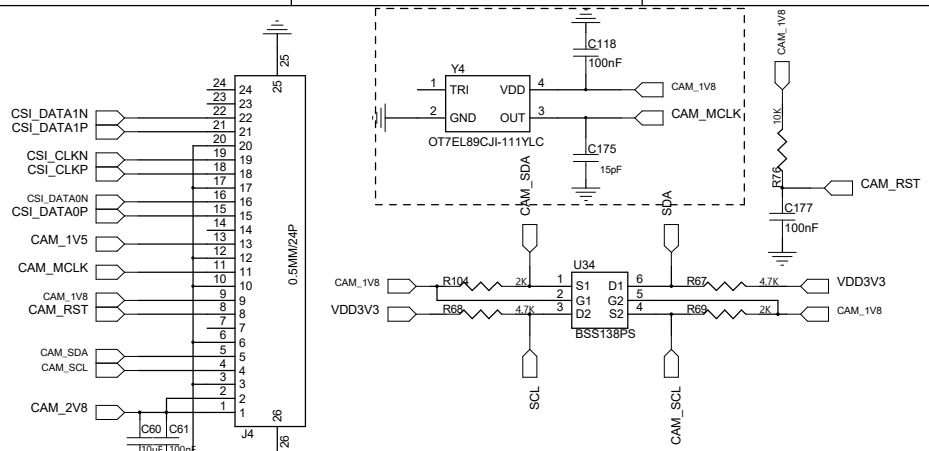

SDA-------IO7
SCL-------IO8

H722/H769二选一（需要短接短路点）

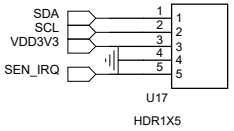

I2C ADDRESS:0X29/X69

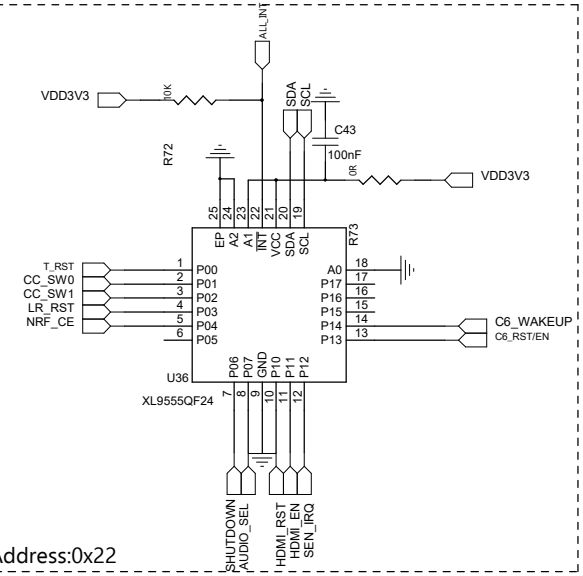

I2C Address:0x22

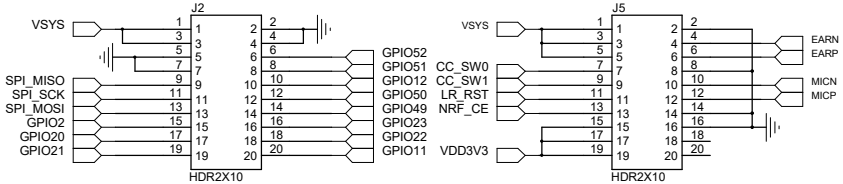

SPI_MOSI-------IO46
SPI_SCK-------IO45
SPI_MISO-------IO44

REVISION RECORD			
LTR	ECO NO:	APPROVED:	DATE:

DRAWN:	DATED:
CHECKED:	DATED:
QUALITY CONTROL:	DATED:
RELEASED:	DATED:

COMPANY:

TITLE:

CODE:	SIZE:	DRAWING NO:	REV:
	B		

SCALE:

SHEET: 8 OF 8